RELEASE DATE 2023.05.30 - REF ECR 521

-1 EMERGENCY BATTERY TRAY ASSEM

REVISION HISTORY						
DATE	REV	ECO	DESCRIPTION	AUTHOR	CHECKED	APPROVED
11/1/19	A	-	INITIAL RELEASE	CMK	LS	CMK

NOTES:

1. SAFETY WIRE PER AC43.13-1B CHG. 1, CHAPTER 7, 7-122 THROUGH 7-126, FIG. 7-5
2. TORQUE FASTENERS PER AC43.13-1B CHG 1, TABLE 7-1.
3. INSTALL RIVETS PER AC43.13-1B, CHG. 1, CHAP 4, PARA 4-57.

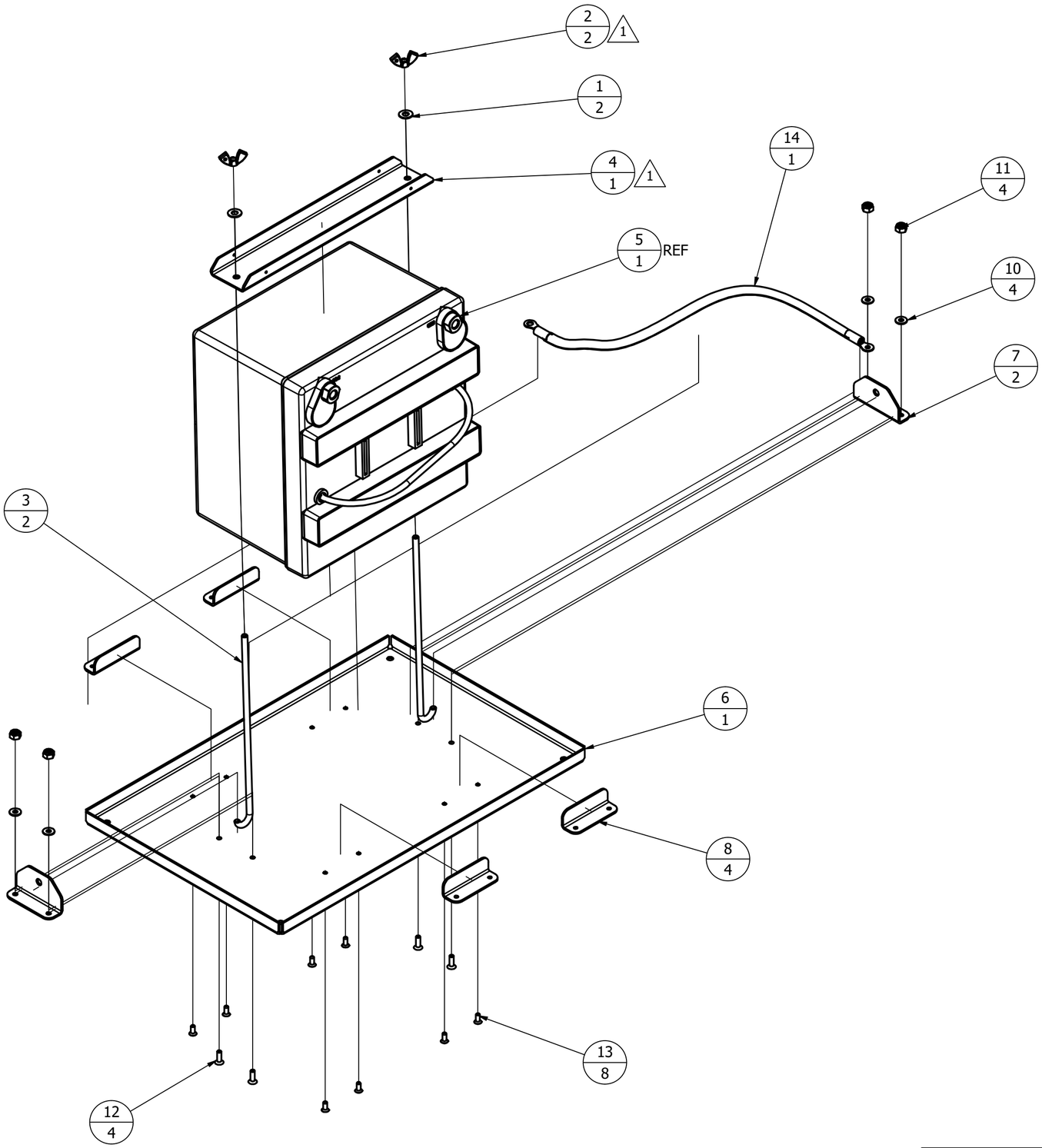

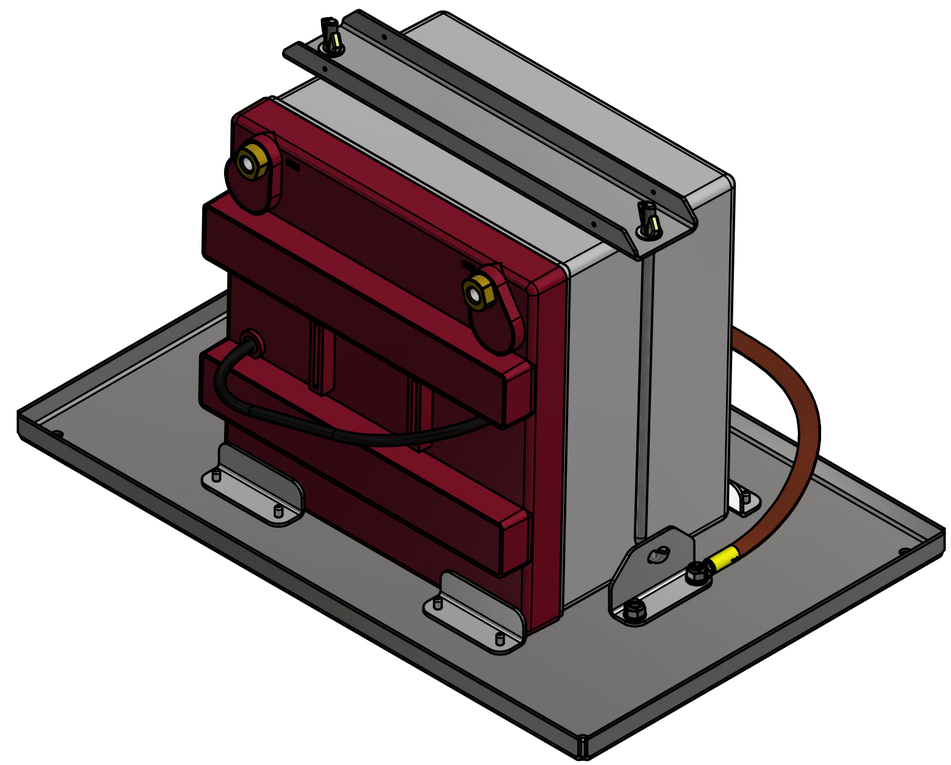

PARTS LIST			
ITEM	QTY	PART NUMBER	DESCRIPTION
1	2	NAS1149D0332J	WASHER
2	2	MS35426-13	WING NUT
3	2	RT-6150-11	ROD
4	1	RT-6150-12	TOP BRACE
5	1	ES59200-2	BATTERY (REF)
6	1	RT-6150-14	BATTERY TRAY
7	2	RT-6150-15	BRACKET, ANCHOR
8	4	RT-6150-16	TAB
10	4	NAS1149CN632R	WASHER
11	4	MS21044C06	LOCKNUT
12	4	MS24693C27	SCREW
13	8	MS20427M4-5	RIVET
14	1	RT-6150-17	GROUNDING STRAP ASSEM

CONFIDENTIAL INFORMATION
THE INFORMATION AND DATA CONTAINED HEREIN IS PROPRIETARY AND IS SUBMITTED IN CONFIDENCE; AND SHALL NOT BE DISCLOSED, USED OR DUPLICATED FOR ANY PURPOSE WHATSOEVER WITHOUT THE PRIOR WRITTEN PERMISSION OF PARAVION TECHNOLOGY, INC.

UNLESS OTHERWISE SPECIFIED
DRAWING INTERPRETED PER ASME Y14.100-2004
DIMENSIONS INTERPRETED PER ASME Y14.5-2009
DIMENSIONS IN INCHES
SURFACE ROUGHNESS: 125
REMOVE BURRS & BREAK EDGES 0.005 TO 0.015
.X ±.1
.XX ±.01
.XXX ±.005
ANGLES ±1°
THREADS
INTERNAL: CLASS 2B
EXTERNAL: CLASS 2A

APPROVALS		DATE
DRAWN	CMK	11/1/19
CHECKED	LS	11/4/19
APPROVED	CMK	11/1/19

© 2019 PARAVION TECHNOLOGY, INC. PARAVION IS A TRADEMARK OF PARAVION TECHNOLOGY, INC.

THIRD ANGLE PROJECTION

Paravion® Technology Inc.
2001 AIRWAY AVENUE
FORT COLLINS, CO 80524
www.paravion.com

DOCUMENT TITLE
EMERGENCY BATTERY ASSEMBLY

DRAWING NUMBER	CAGE CODE	REV	ECO
RT-6150	3CMA0	A	-

DO NOT SCALE DRAWING
SHEET 1 OF 7

RELEASE DATE 2023.05.30 - REF ECR 521

-11 ROD

MATERIAL: Ø3/16" X 7.8" 304 STAINLESS STEEL ROD PER ASTM A276, ANNEALED CONDITION

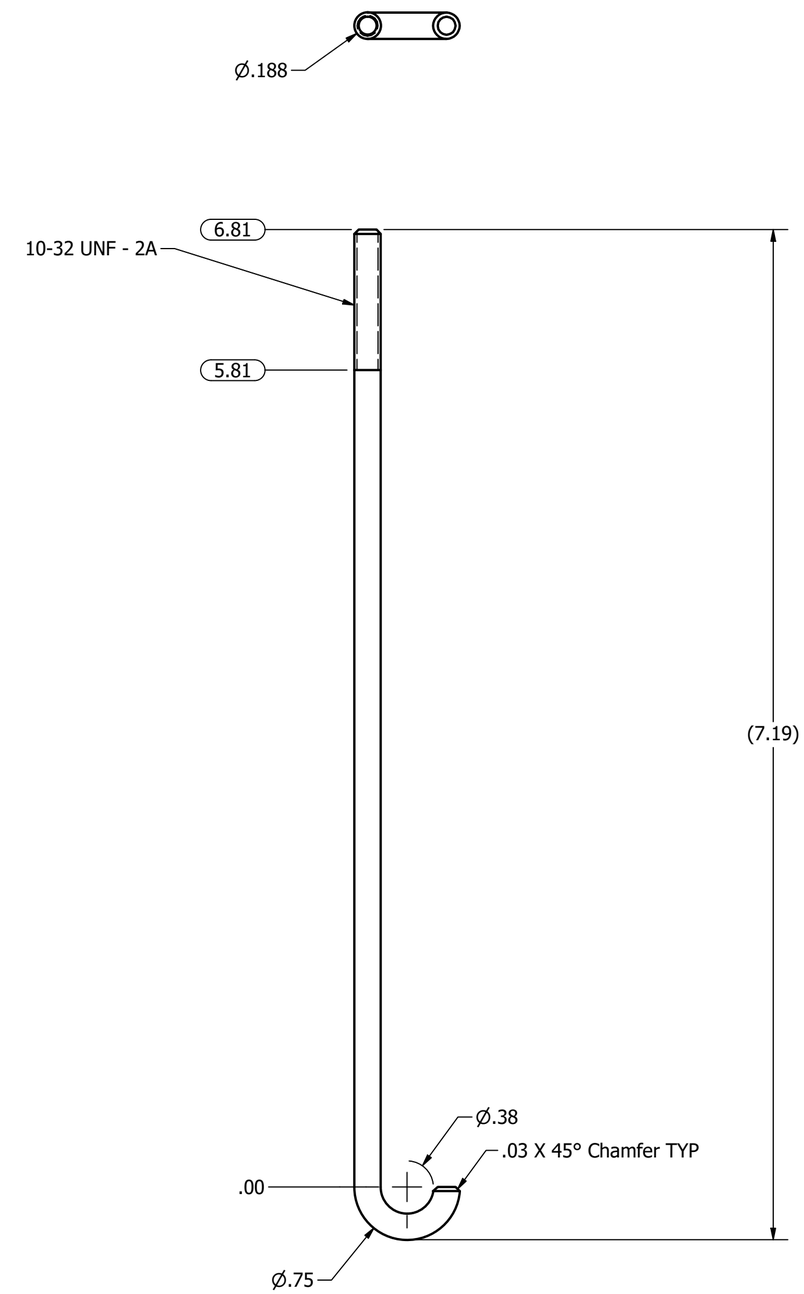

CONFIDENTIAL INFORMATION
THE INFORMATION AND DATA CONTAINED HEREIN IS PROPRIETARY AND IS SUBMITTED IN CONFIDENCE; AND SHALL NOT BE DISCLOSED, USED OR DUPLICATED FOR ANY PURPOSE WHATSOEVER WITHOUT THE PRIOR WRITTEN PERMISSION OF PARAVION TECHNOLOGY, INC.

UNLESS OTHERWISE SPECIFIED
DRAWING INTERPRETED PER ASME Y14.100-2004
DIMENSIONS INTERPRETED PER ASME Y14.5-2009
DIMENSIONS IN INCHES
SURFACE ROUGHNESS: 125
REMOVE BURRS & BREAK EDGES 0.005 TO 0.015
.X ±.1
.XX ±.01
.XXX ±.005
ANGLES ±1°
THREADS
INTERNAL: CLASS 2B
EXTERNAL: CLASS 2A

APPROVALS		DATE
DRAWN	CMK	11/1/19
CHECKED	LS	11/4/19
APPROVED	CMK	11/1/19

© 2019 PARAVION TECHNOLOGY, INC. PARAVION IS A TRADEMARK OF PARAVION TECHNOLOGY, INC.

THIRD ANGLE PROJECTION

Paravion® Technology Inc.
2001 AIRWAY AVENUE
FORT COLLINS, CO 80524
www.paravion.com

DOCUMENT TITLE
EMERGENCY BATTERY ASSEMBLY

DRAWING NUMBER	CAGE CODE	REV	ECO
RT-6150	3CMA0	A	-

DO NOT SCALE DRAWING
SHEET 2 OF 7

RELEASE DATE 2023.05.30 - REF ECR 521

-12 TOP BRACE

MATERIAL: 0.063" THK 301 STAINLESS STEEL SHEET 1/4 HARD PER AMS 5517
FINISH: NONE

BEND CHART		
·	BEND #1	BEND #2
PUNCH	6	6
DIE	1	1
ANGLE	90	90
DIMENSION	0.436	0.436

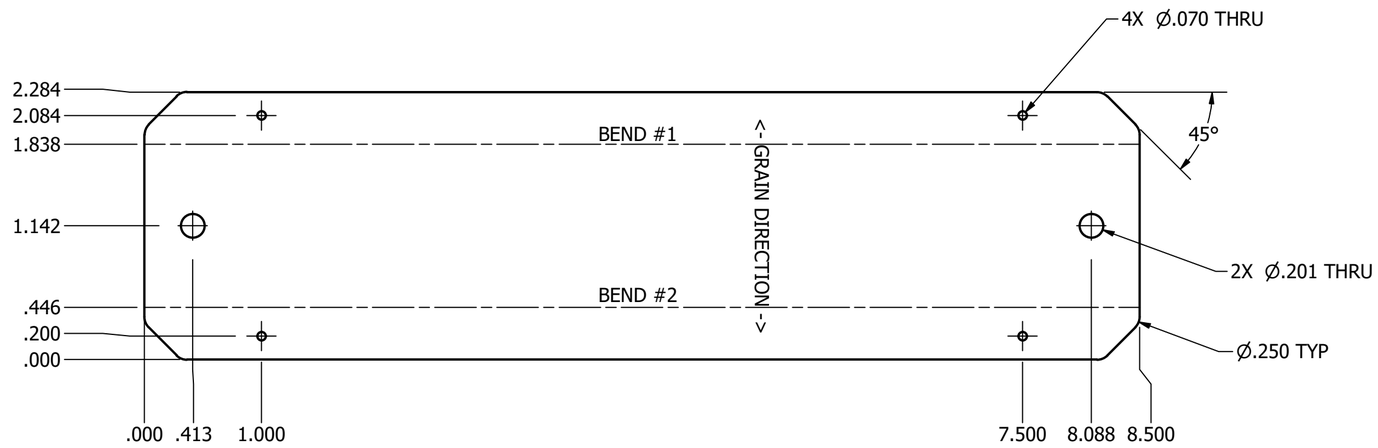

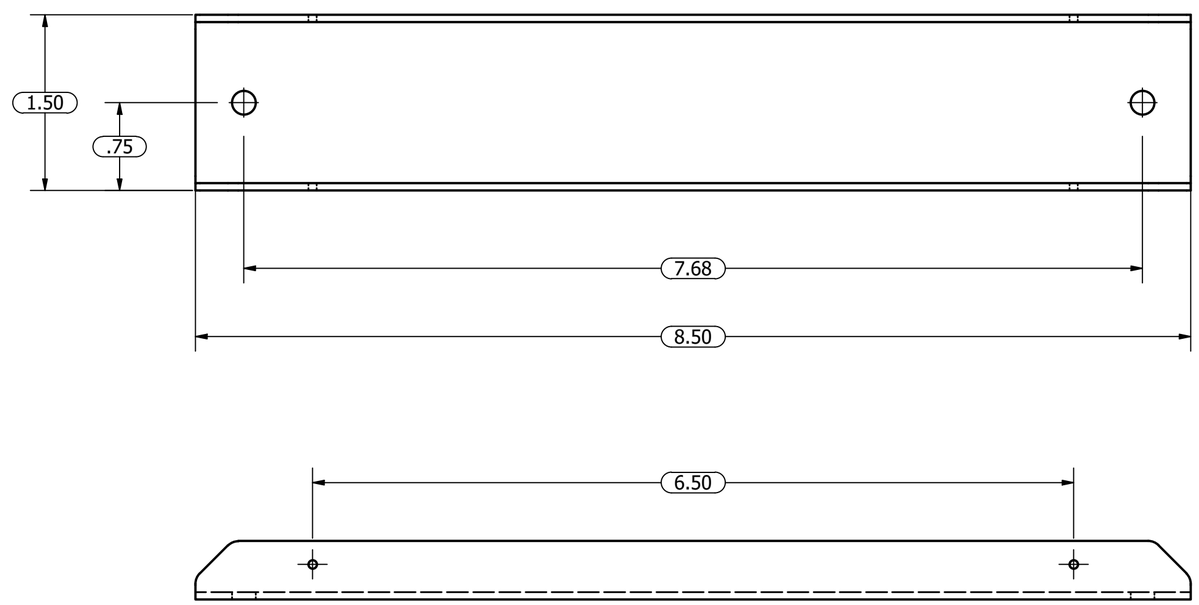

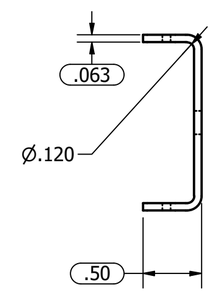

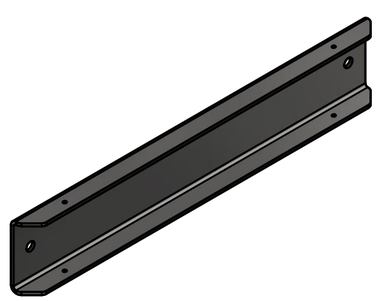

CONFIDENTIAL INFORMATION
THE INFORMATION AND DATA CONTAINED HEREIN IS PROPRIETARY AND IS SUBMITTED IN CONFIDENCE; AND SHALL NOT BE DISCLOSED, USED OR DUPLICATED FOR ANY PURPOSE WHATSOEVER WITHOUT THE PRIOR WRITTEN PERMISSION OF PARAVION TECHNOLOGY, INC.

UNLESS OTHERWISE SPECIFIED
DRAWING INTERPRETED PER ASME Y14.100-2004
DIMENSIONS INTERPRETED PER ASME Y14.5-2009
DIMENSIONS IN INCHES
SURFACE ROUGHNESS: 125
REMOVE BURRS & BREAK EDGES 0.005 TO 0.015
.X ±.1
.XX ±.01
.XXX ±.005
ANGLES ±1°
THREADS
INTERNAL: CLASS 2B
EXTERNAL: CLASS 2A

APPROVALS		DATE
DRAWN	CMK	11/1/19
CHECKED	LS	11/4/19
APPROVED	CMK	11/1/19

© 2019 PARAVION TECHNOLOGY, INC. PARAVION IS A TRADEMARK OF PARAVION TECHNOLOGY, INC.

THIRD ANGLE PROJECTION

Paravion® Technology Inc.
2001 AIRWAY AVENUE
FORT COLLINS, CO 80524
www.paravion.com

DOCUMENT TITLE
EMERGENCY BATTERY ASSEMBLY

DRAWING NUMBER	CAGE CODE	REV	ECO
RT-6150	3CMA0	A	-

DO NOT SCALE DRAWING
SHEET 3 OF 7

RELEASE DATE 2023.05.30 - REF ECR 521

-14 BATTERY TRAY

MATERIAL: 0.063" THK AISI 301 STAINLESS STEEL SHEET, 1/4 HARD PER AMS 5517
FINISH: NONE

BEND CHART				
·	BEND #1	BEND #2	BEND #3	BEND #4
PUNCH	6	6	6	6
DIE	1	1	1	1
ANGLE	90	90	90	90
DIMENSION	0.436	0.436	0.436	0.436

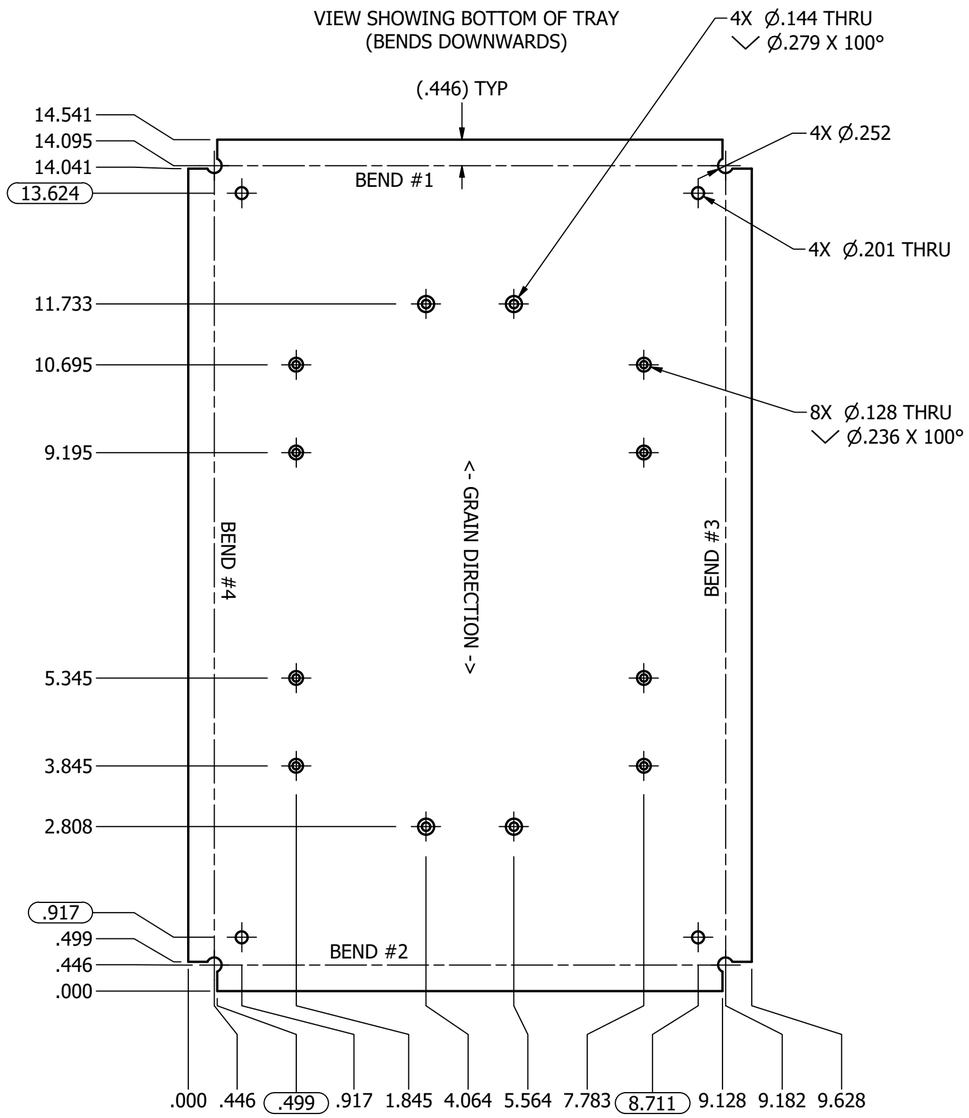

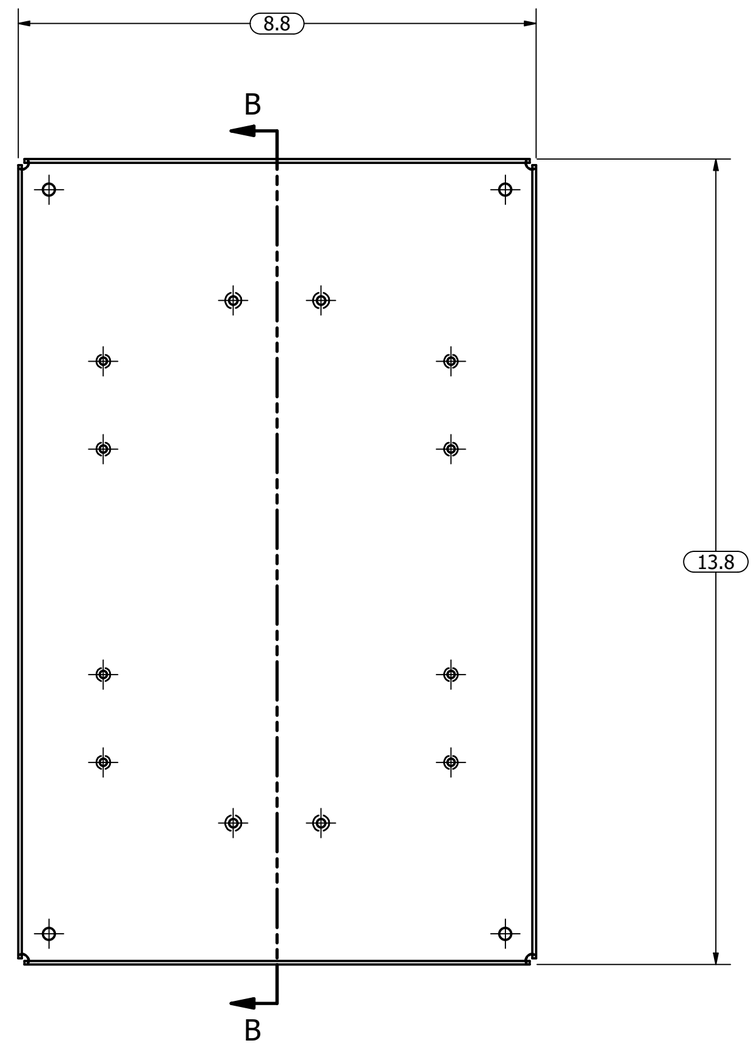

SECTION B-B
SCALE 1 / 2

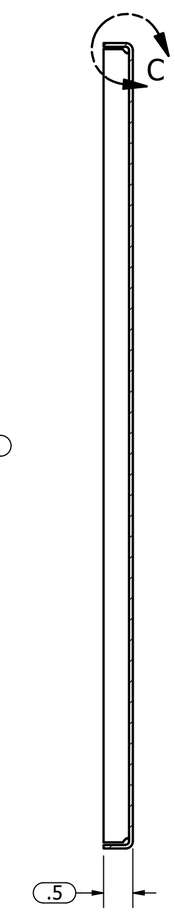

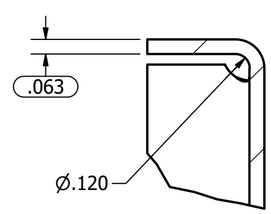

DETAIL C
SCALE 2 : 1

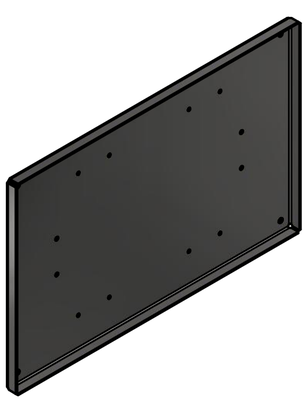

CONFIDENTIAL INFORMATION
THE INFORMATION AND DATA CONTAINED HEREIN IS PROPRIETARY AND IS SUBMITTED IN CONFIDENCE; AND SHALL NOT BE DISCLOSED, USED OR DUPLICATED FOR ANY PURPOSE WHATSOEVER WITHOUT THE PRIOR WRITTEN PERMISSION OF PARAVION TECHNOLOGY, INC.

UNLESS OTHERWISE SPECIFIED
DRAWING INTERPRETED PER ASME Y14.100-2004
DIMENSIONS INTERPRETED PER ASME Y14.5-2009
DIMENSIONS IN INCHES
SURFACE ROUGHNESS: 125
REMOVE BURRS & BREAK EDGES 0.005 TO 0.015
.X ±.1
.XX ±.01
.XXX ±.005
ANGLES ±1°
THREADS
INTERNAL: CLASS 2B
EXTERNAL: CLASS 2A

APPROVALS		DATE
DRAWN	CMK	11/1/19
CHECKED	LS	11/4/19
APPROVED	CMK	11/1/19

© 2019 PARAVION TECHNOLOGY, INC. PARAVION IS A TRADEMARK OF PARAVION TECHNOLOGY, INC.

THIRD ANGLE PROJECTION

Paravion® Technology Inc.
2001 AIRWAY AVENUE
FORT COLLINS, CO 80524
www.paravion.com

DOCUMENT TITLE
EMERGENCY BATTERY ASSEMBLY

DRAWING NUMBER	CAGE CODE	REV	ECO
RT-6150	3CMA0	A	-

DO NOT SCALE DRAWING
SHEET 4 OF 7

RELEASE DATE 2023.05.30 - REF ECR 521

-15 BRACKET, ANCHOR

MATERIAL: 0.063" THK AISI 301 STAINLESS STEEL SHEET, 1/4 HARD PER AMS 5517
FINISH: NONE

BEND CHART	
·	BEND #1
PUNCH	6
DIE	1
ANGLE	90
DIMENSION	0.561

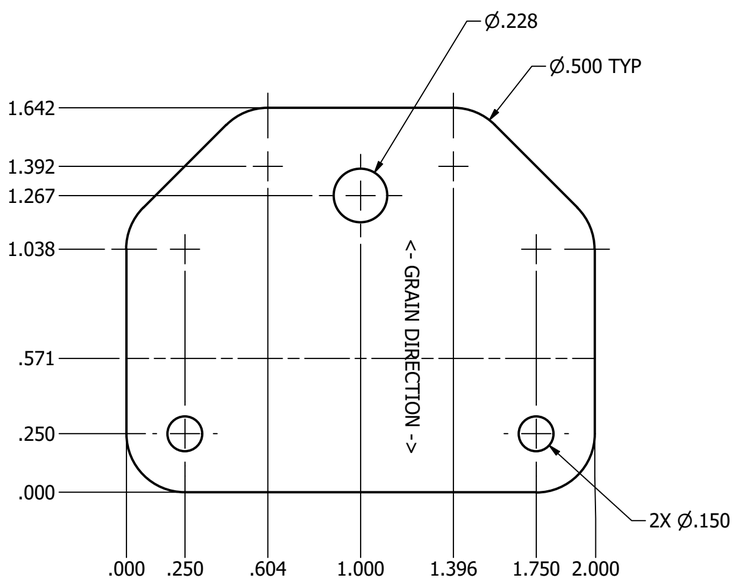

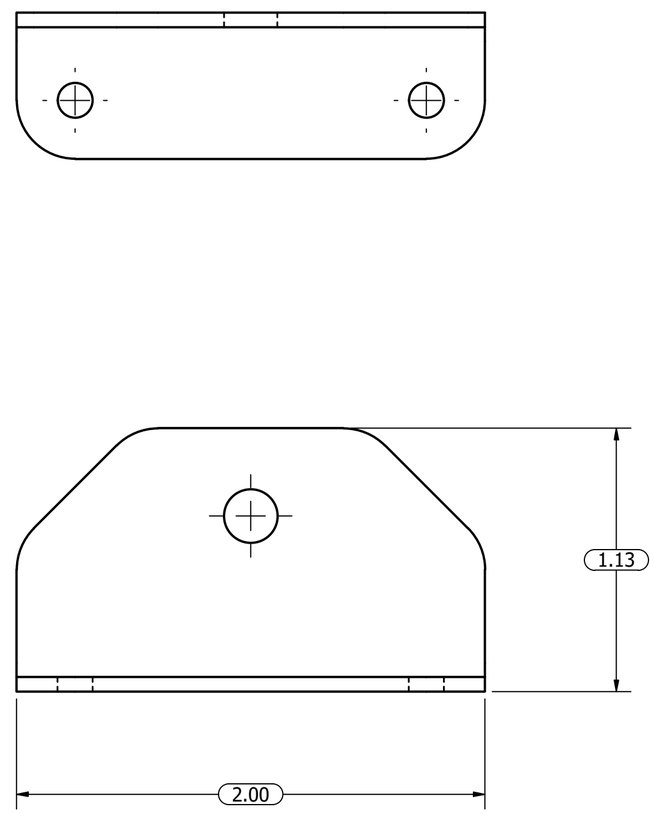

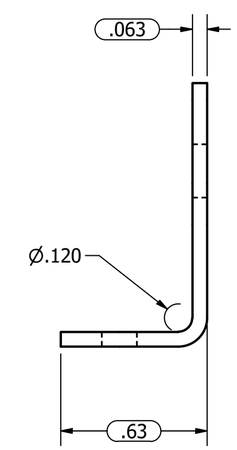

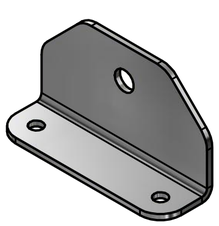

CONFIDENTIAL INFORMATION
THE INFORMATION AND DATA CONTAINED HEREIN IS PROPRIETARY AND IS SUBMITTED IN CONFIDENCE; AND SHALL NOT BE DISCLOSED, USED OR DUPLICATED FOR ANY PURPOSE WHATSOEVER WITHOUT THE PRIOR WRITTEN PERMISSION OF PARAVION TECHNOLOGY, INC.

UNLESS OTHERWISE SPECIFIED
DRAWING INTERPRETED PER ASME Y14.100-2004
DIMENSIONS INTERPRETED PER ASME Y14.5-2009
DIMENSIONS IN INCHES
SURFACE ROUGHNESS: 125
REMOVE BURRS & BREAK EDGES 0.005 TO 0.015
.X ±.1
.XX ±.01
.XXX ±.005
ANGLES ±1°
THREADS
INTERNAL: CLASS 2B
EXTERNAL: CLASS 2A

APPROVALS		DATE
DRAWN	CMK	11/1/19
CHECKED	LS	11/4/19
APPROVED	CMK	11/1/19

© 2019 PARAVION TECHNOLOGY, INC. PARAVION IS A TRADEMARK OF PARAVION TECHNOLOGY, INC.

THIRD ANGLE PROJECTION

Paravion® Technology Inc.
2001 AIRWAY AVENUE
FORT COLLINS, CO 80524
www.paravion.com

DOCUMENT TITLE
EMERGENCY BATTERY ASSEMBLY

DRAWING NUMBER	CAGE CODE	REV	ECO
RT-6150	3CMA0	A	-

DO NOT SCALE DRAWING
SHEET 5 OF 7

RELEASE DATE 2023.05.30 - REF ECR 521

-16 TAB

MATERIAL: 0.063" THK AISI 301 STAINLESS STEEL SHEET, 1/4 HARD PER AMS 5517
FINISH: NONE

BEND CHART	
·	BEND #1
PUNCH	6
DIE	1
ANGLE	90
DIMENSION	0.561

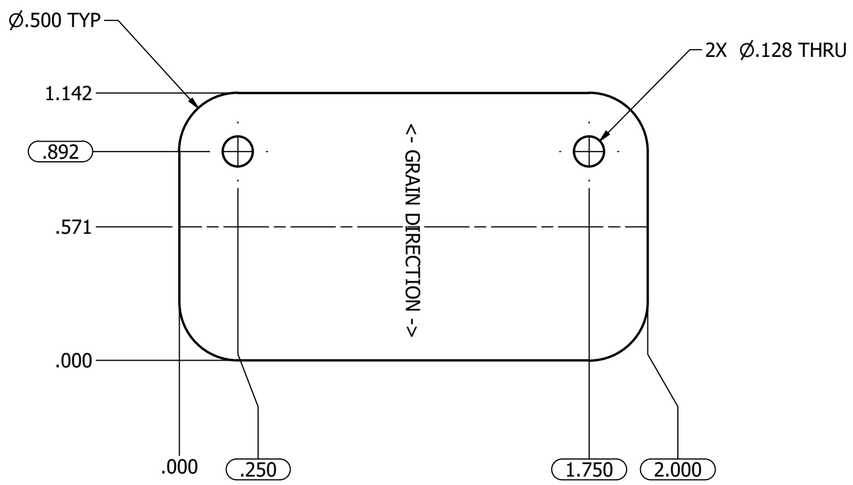

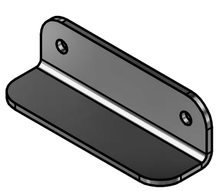

CONFIDENTIAL INFORMATION
THE INFORMATION AND DATA CONTAINED HEREIN IS PROPRIETARY AND IS SUBMITTED IN CONFIDENCE; AND SHALL NOT BE DISCLOSED, USED OR DUPLICATED FOR ANY PURPOSE WHATSOEVER WITHOUT THE PRIOR WRITTEN PERMISSION OF PARAVION TECHNOLOGY, INC.

UNLESS OTHERWISE SPECIFIED
DRAWING INTERPRETED PER ASME Y14.100-2004
DIMENSIONS INTERPRETED PER ASME Y14.5-2009
DIMENSIONS IN INCHES
SURFACE ROUGHNESS: 125
REMOVE BURRS & BREAK EDGES 0.005 TO 0.015
.X ±.1
.XX ±.01
.XXX ±.005
ANGLES ±1°
THREADS
INTERNAL: CLASS 2B
EXTERNAL: CLASS 2A

APPROVALS		DATE
DRAWN	CMK	11/1/19
CHECKED	LS	11/4/19
APPROVED	CMK	11/1/19

© 2019 PARAVION TECHNOLOGY, INC. PARAVION IS A TRADEMARK OF PARAVION TECHNOLOGY, INC.

THIRD ANGLE PROJECTION

Paravion® Technology Inc.
2001 AIRWAY AVENUE
FORT COLLINS, CO 80524
www.paravion.com

DOCUMENT TITLE
EMERGENCY BATTERY ASSEMBLY

DRAWING NUMBER	CAGE CODE	REV	ECO
RT-6150	3CMA0	A	-

DO NOT SCALE DRAWING
SHEET 6 OF 7

RELEASE DATE 2023.05.30 - REF ECR 521

-17 GROUNDING STRAP ASSEM

PARTS LIST			
ITEM	QTY	PART NUMBER	DESCRIPTION
1	6 FT	ES53600-3	FLAT BRAID
2	1	MS25036-111	RING TERMINAL
3	1	MS25036-112	RING TERMINAL
4	6 FT	M23053/5-107-0	HEAT SHRINK

NOTES:

1. CRIMP TERMINAL PER MANUFACTURER RECOMMENDATIONS OR AMP 408-9252 SECTION 4.4 INSPECTION
2. INCLUDE WITH KIT LOOSE (UNCRIMPED) FOR CUSTOM CUT TO LENGTH INSTALLATION.

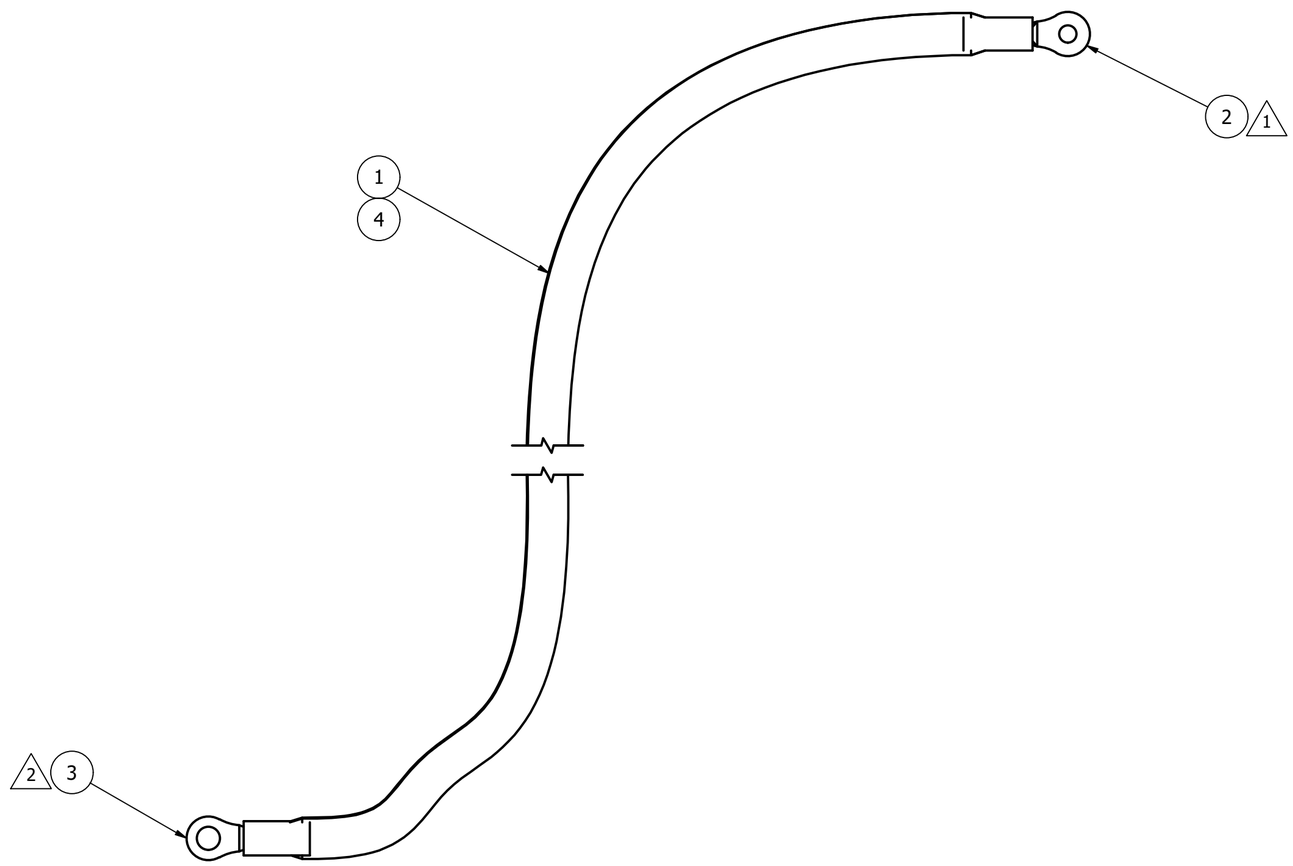

CONFIDENTIAL INFORMATION
THE INFORMATION AND DATA CONTAINED HEREIN IS PROPRIETARY AND IS SUBMITTED IN CONFIDENCE; AND SHALL NOT BE DISCLOSED, USED OR DUPLICATED FOR ANY PURPOSE WHATSOEVER WITHOUT THE PRIOR WRITTEN PERMISSION OF PARAVION TECHNOLOGY, INC.

UNLESS OTHERWISE SPECIFIED
DRAWING INTERPRETED PER ASME Y14.100-2004
DIMENSIONS INTERPRETED PER ASME Y14.5-2009
DIMENSIONS IN INCHES
SURFACE ROUGHNESS: 125
REMOVE BURRS & BREAK EDGES 0.005 TO 0.015
.X ±.1
.XX ±.01
.XXX ±.005
ANGLES ±1°
THREADS
INTERNAL: CLASS 2B
EXTERNAL: CLASS 2A

APPROVALS		DATE
DRAWN	CMK	11/1/19
CHECKED	LS	11/4/19
APPROVED	CMK	11/1/19

© 2019 PARAVION TECHNOLOGY, INC. PARAVION IS A TRADEMARK OF PARAVION TECHNOLOGY, INC.

THIRD ANGLE PROJECTION

Paravion® Technology Inc.
2001 AIRWAY AVENUE
FORT COLLINS, CO 80524
www.paravion.com

DOCUMENT TITLE
EMERGENCY BATTERY ASSEMBLY

DRAWING NUMBER	CAGE CODE	REV	ECO
RT-6150	3CMA0	A	-

DO NOT SCALE DRAWING
SHEET 7 OF 7